vector frame

Vector Frame Kit 02

Total graphic area: 141.91"w X 98.5"h
(size including bleeds & extrusions)
Graphic at 50% of actual size

Vector Frame 3' X 8' Panels (Panel A, C, E)
Total graphic area: 39.4375"w X 98.5"h
Total visual area: 35.4375"w X 94.5"h

Vector Frame 1' X 8' Panels (Panel B & D)
Total graphic area: 15.81"w X 98.5"h
Total visual area: 11.81"w X 94.5"h

Please be sure to include the 2" bleed around the perimeter to compensate for the finishing of the graphics. Do not design any critical elements (text, logos, etc.) within 1" of the edge (see dotted lines).
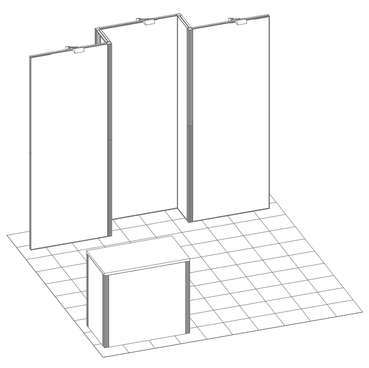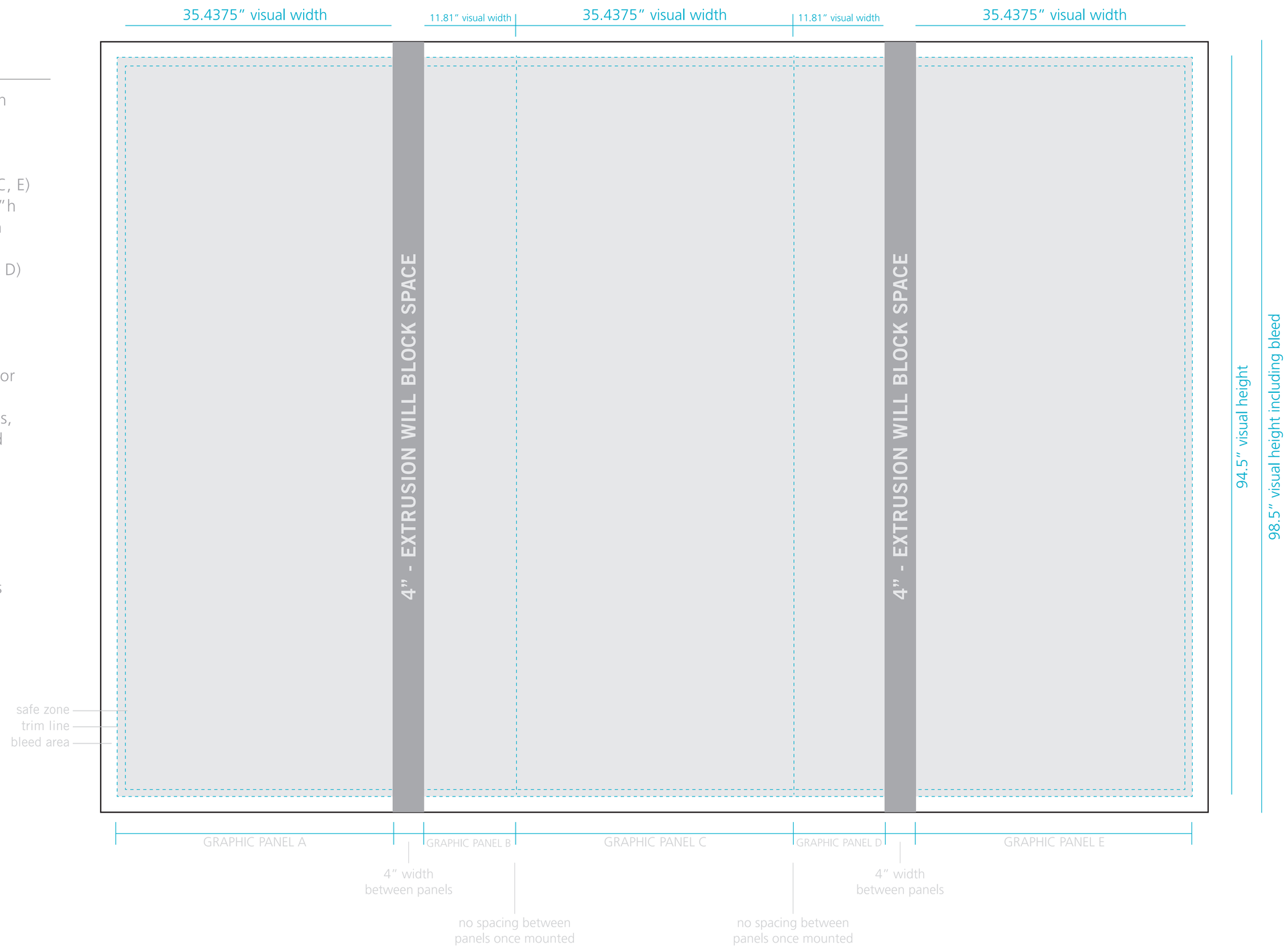
General Artwork Guidelines
- cmyk color mode
- do not embed images, supply them
- resolution must be 100-120ppi
- all fonts must be created to outlines
- 4" extrusion will cover graphics
do not design any critical elements
near extrusion