formulate

Formulate Tabletop, TT4

Total Graphic Area: 66"w X 50.5"h
Total Visual Area: 62"w X 46.5"h

Please be sure to include the 2" bleed around the perimeter (note trim & stitch locations on template). Do not design any critical elements (text, logos, etc.) within 2" of the edge.
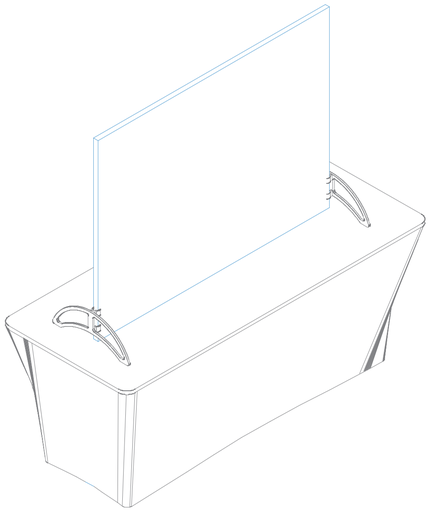
General Artwork Guidelines
- cmyk color mode
- do not embed images, supply them
- resolution must be 100-120 ppi
- all fonts must be created to outlines